Claridge® *Solution*™ Board Specification

eBeam Enabled™ *Solution* Markerboard

The Claridge *Solution* board is an integrated markerboard with a GREENGUARD certified, low-gloss porcelain writing surface that is guaranteed for 50 years. It was designed to be used. Write. Erase. Project. Interact. All day – every day. The *Solution* comes bundled with the highly acclaimed eBeam Interact software, providing rich content for presentations.

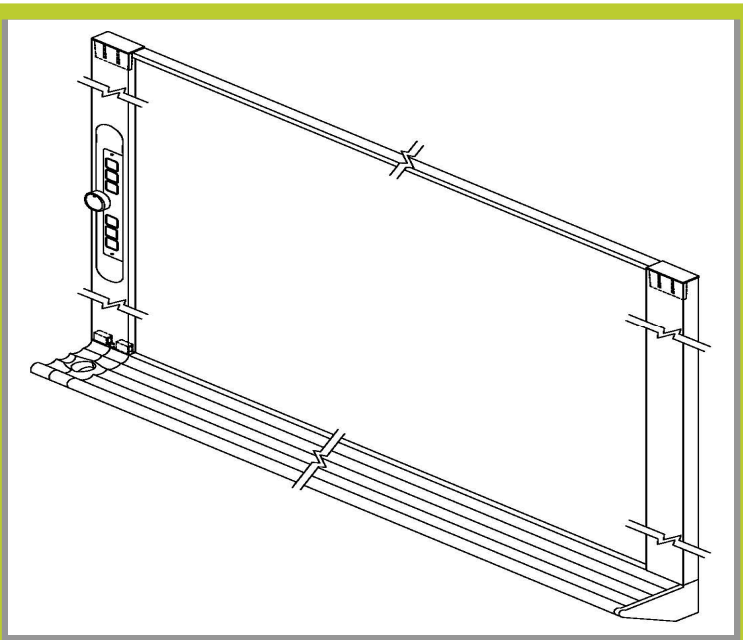

Technical Specifications

	IMB4x6-S	IMB4x8-S
Size	4' x 6'	4' x 8'
Active viewing area	44" x 67-2/3"	44" x 90-1/4"
Diagonal	82"	102"
Weight	75 lbs.	100 lbs.

Computer Requirements

Windows
- Pentium™ IV processor
- 1.4GHz, with 512 MB RAM
- Windows 2000/XP/Tablet PC or Vista
- 40 MB available hard drive space
- Available USB port

MAC
- Mac OSX 10.4.x
- 1.42 GHz G4 PowerPC
- 25 MB available hard drive space
- Available USB port

Accessories

(Solution board comes with "brains" installed in side trim. Brain contains electronics, LEDs, user interface, etc. Aluminum trim is designed to accommodate pre-built partitions for cords and cables.)
- 10 ft. USB A-B Cable (for connecting board to computer)
- Stylus – 3-button stylus can left and right click as well as provide instant access to software tools
- AAA battery
- Software CD

Software

- Allows user to present, annotate and share presentations in real-time.
- The one-of-a-kind circular tool palette floats over any application to provide quick access to features needed for dynamic and engaging lessons and presentations.
- Includes Scrapbook, a multimedia organizer for gathering, preparing, presenting and sharing content.
- Built-in meeting feature to collaborate with colleagues anywhere in the world.

Features and Benefits

Writing Surface:
- Porcelain Enamel Steel, Low Gloss Finish
- GREENGUARD Indoor Air Quality Certified
- GREENGUARD Children & Schools Certified

Frame Finish:
- Satin Anodize Aluminum

Accessory Tray:
- Full Length, Hollow Tray with USB Connection

Mounting Method:
- Angle Clips, furnished for top and bottom

Warranty:
- 50-Year Writing Surface Guarantee
- 2-Year Electronics

Claridge® Products and Equipment, Inc.
P. O. Box 910
Harrison, AR 72602-0910
Phone: 870-743-2200 (Toll Free 800-434-4610)
Fax: 870-743-1908
www.claridgeproducts.com